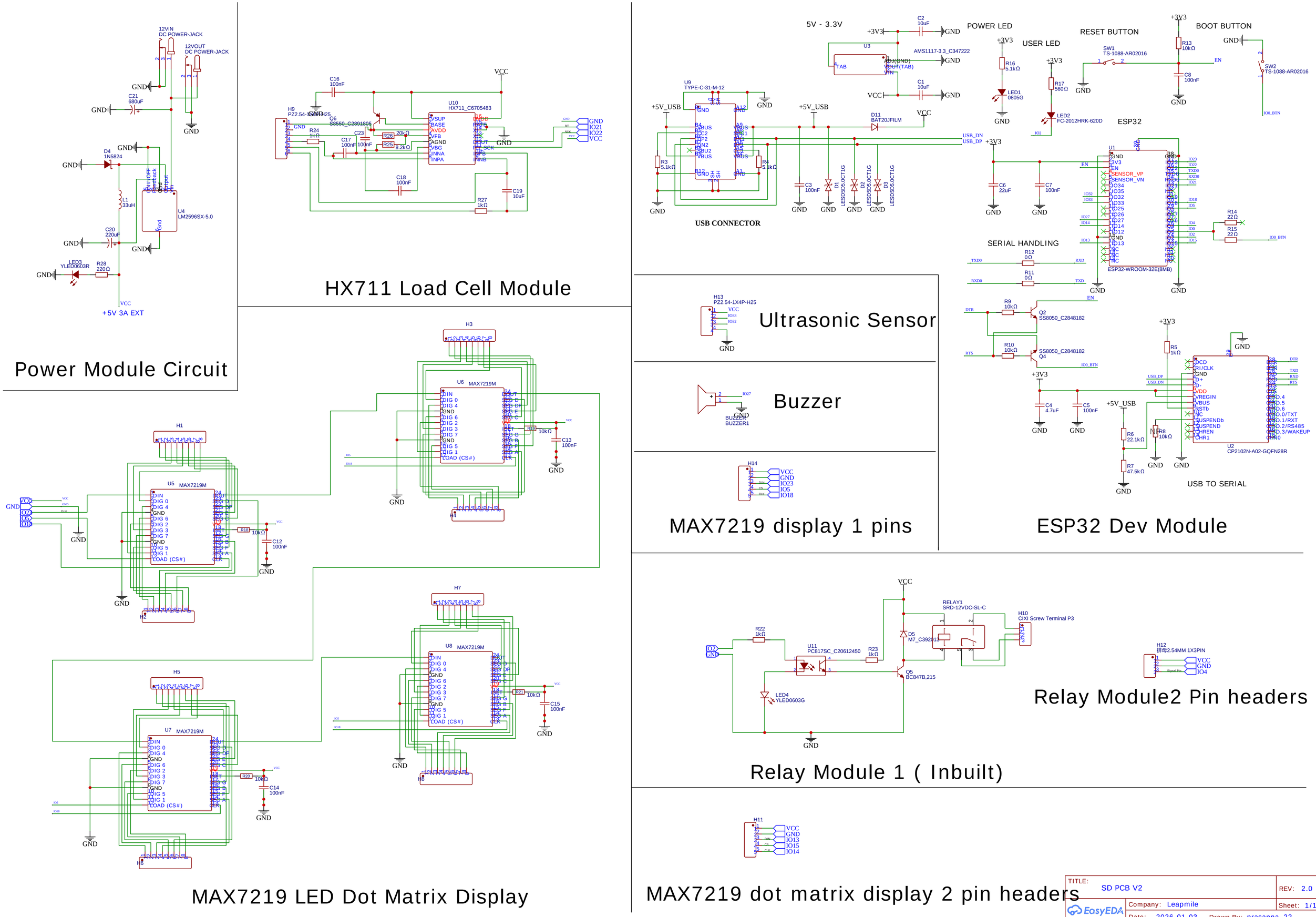
Power Module Circuit
12VIN
DC POWER-JACK
12VOUT
DC POWER-JACK
C21
680uF
D4
1N5824
L1
33uH
U4
LM2596SX-5.0
C20
220uF
LED3
YLED0603R
R28
220Ω
+5V 3A EXT
HX711 Load Cell Module
U10
HX711_C6705483
Q6
S8550_C2801805
R24
1kΩ
C17
100nF
C23
100nF
R26
20kΩ
R25
8.2kΩ
C16
100nF
C18
100nF
R27
1kΩ
C19
10uF
H9
PZ2.54-1X4P-H25
GND
IO21
IO22
VCC
5V - 3.3V
C2
10uF
U3
AMS1117-3.3_C347222
C1
10uF
POWER LED
R16
5.1kΩ
LED1
0805G
USER LED
R17
560Ω
LED2
FC-2012HRK-620D
RESET BUTTON
SW1
TS-1088-AR02016
R13
10kΩ
C8
100nF
BOOT BUTTON
SW2
TS-1088-AR02016
IO0_BTN
U9
TYPE-C-31-M-12
+5V_USB
R3
5.1kΩ
R4
5.1kΩ
C3
100nF
D1
LESD5D5.0CT1G
D2
LESD5D5.0CT1G
D3
LESD5D5.0CT1G
D11
BAT20JFILM
USB_DN
USB_DP
USB CONNECTOR
ESP32
U1
ESP32-WROOM-32E(8MB)
C6
22uF
C7
100nF
R14
22Ω
R15
22Ω
SERIAL HANDLING
R12
0Ω
R11
0Ω
TXD0
RXD0
R9
10kΩ
R10
10kΩ
Q2
SS8050_C2848182
Q4
SS8050_C2848182
DTR
RTS
EN
IO0_BTN
C4
4.7uF
C5
100nF
R5
1kΩ
R6
22.1kΩ
R7
47.5kΩ
R8
10kΩ
U2
CP2102N-A02-GQFN28R
USB TO SERIAL
Ultrasonic Sensor
H13
PZ2.54-1X4P-H25
Buzzer
BUZZER
BUZZER1
IO27
MAX7219 display 1 pins
H14
VCC
GND
IO23
IO5
IO18
ESP32 Dev Module
Relay Module1 (Inbuilt)
RELAY1
SRD-12VDC-SL-C
H10
CIXI Screw Terminal P3
R22
1kΩ
U11
PC817SC_C20612450
R23
1kΩ
D5
M7_C392013
Q5
BC847B,215
LED4
YLED0603G
IO2
Relay Module2 Pin headers
H12
排母2.54MM 1X3PIN
IO4
MAX7219 LED Dot Matrix Display
H1
H2
H3
H4
H5
H6
H7
H8
U5
U6
U7
U8
MAX7219M
R18
R19
R20
R21
10kΩ
C12
100nF
C13
100nF
C14
100nF
C15
100nF
MAX7219 dot matrix display 2 pin headers
H11
VCC
GND
IO13
IO15
IO14
TITLE:
SD PCB V2
REV: 2.0
Company: Leapmile
Sheet: 1/1
Date: 2026-01-03
Drawn By: prasanna_22
EasyEDA